Current part is item (2) on diagram. Available at www.oshkoshequipment.com

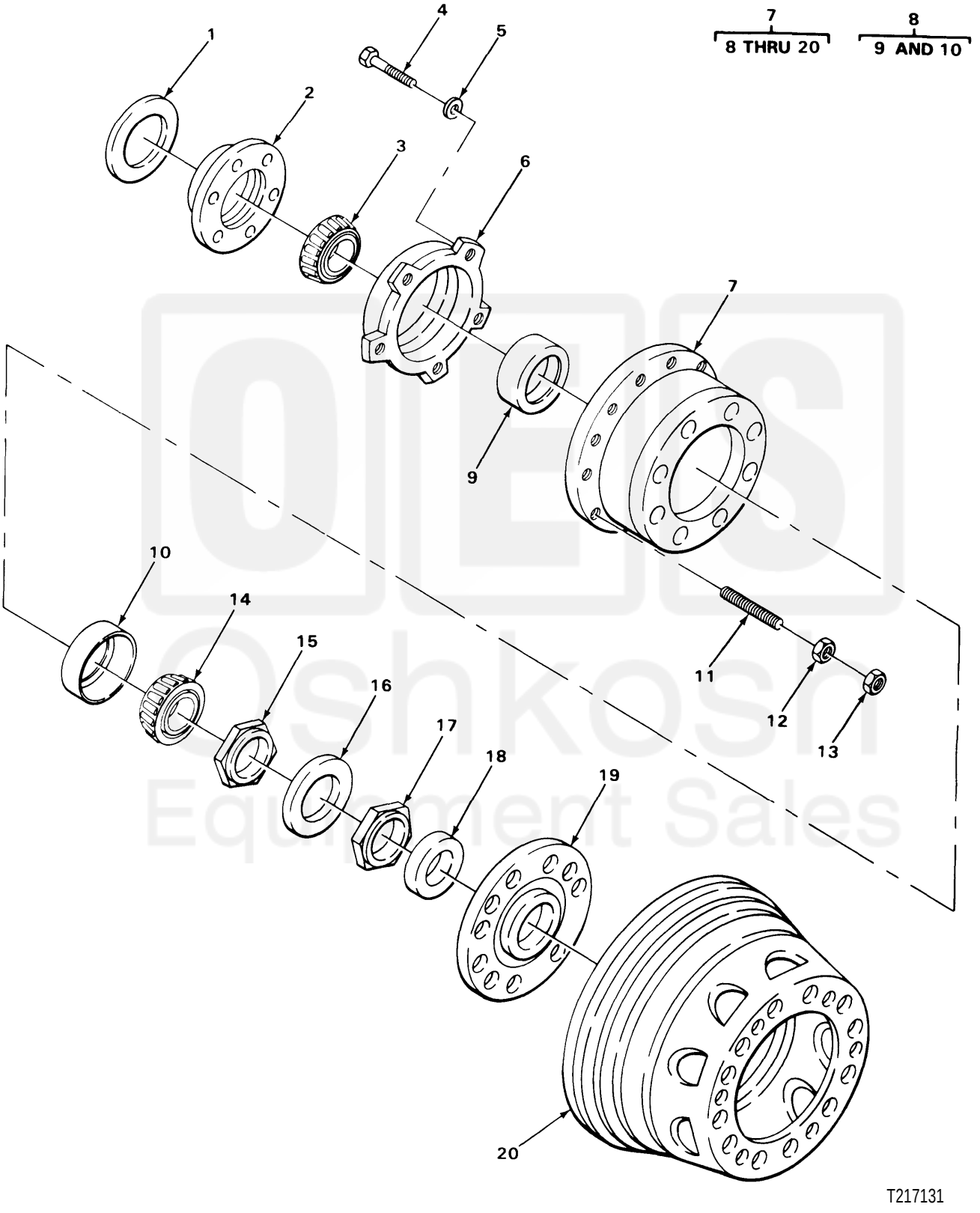

FIGURE 210. TANDEM AXLE HUB AND DRUM ASSEMBLY (MODEL M915).

Current part is item (2) on diagram. Available at www.oshkoshequipment.com

Current part is item (2) on diagram. Available at www.oshkoshequipment.com

(1) ITEM NO	(2) SMR CODE	(3) FSCM	(4) PART NUMBER	(5) DESCRIPTION AND USABLE ON CODE (UOC)	(6) QTY
				GROUP:1311 WHEEL ASSEMBLY	
				FIGURE 210. TANDEM AXLE HUB AND DRUM ASSEMBLY (MODEL M915).	
1	PAOZZ	78500	1199B1666	RING,WIPER INNER UOC:U21	1
2	PAOZZ	65282	839495	SEAL,PLAIN,ENCASED OIL, INNER UOC:U21	1
3	PAOZZ	78500	598A	CONE AND ROLLERS,TA INNER UOC:U21	1
4	PAOZZ	78500	S255C	SCREW,CAP UOC:U21	5
5	PAOZZ	19207	11601651	WASHER,FLAT UOC:U21	5
6	PAOZZ	78500	3286-C-445	DEFLECTOR,DIRT UOC:U21	1
7	PAOOO	78500	A66-333-Q-2331	HUB AND DRUM ASSY RH UOC:U21	1
7	PAOOO	78500	A65-333-Q-2331	BRAKE DRUM ASSEMBLY LH UOC:U21	1
8	PAOOO	78500	A2-333-Q-2331	.HUB AND STUD ASSY RH UOC:U21	1
8	PAOOO	78500	A1-333-Q-2331	.HUB AND STUD ASSY LH UOC:U21	1
9	PAOZZ	78500	572	..CUP,TAPERED ROLLER OUTER UOC:U21	1
10	PAOZZ	78500	592A	..CUP,TAPERED ROLLER INNER UOC:U21	1
11	PAOZZ	78500	20-X-1464	.STUD,PLAIN RH UOC:U21	10
11	PAOZZ	78500	20-X-1463	.STUD,PLAIN LH UOC:U21	10
12	PAOZZ	78500	1199J114	.NUT CAP ASSEMBLY INNER, RH	10
13	PAOZZ	78500	1199N118	.NUT,CAP PUTER RH UOC:U21	10
13	PAOZZ	96906	MS51983-3	.NUT,PLAIN,SINGLE BA LH UOC:U21	10
14	PAOZZ	78500	580	.CONE AND ROLLERS,TA OUTER UOC:U21	1
15	PAOZZ	78500	1227W517	.NUT,WHEEL BEARING UOC:U21	1
16	PAOZZ	78500	1229U1009	.WASHER,KEY UOC:U21	1
17	PAOZZ	78500	1227-R-330	.NUT,PLAIN,HEXAGON UOC:U21	1
18	PAOZZ	78500	A-1199-S-1917	.WIPER OUTER UOC:U21	1
19	PAOZZ	78500	A1205N612	.SEAL ASSEMBLY,BEARI UOC:U21	1
20	PAOFF	78500	3219-G-3933	.BRAKE DRUM UOC:U21	1
				END OF FIGURE	

Current part is item (2) on diagram. Available at www.oshkoshequipment.com